MJE182

Low voltage high speed switching NPN transistor

Features

- High speed switching
- NPN device

Applications

- Audio amplifier
- High speed switching applications

Description

This device is an NPN low voltage transistor manufactured using epitaxial planar technology and housed in a SOT-32 plastic package. It is designed for low power audio amplifiers and low current, high speed switching applications.

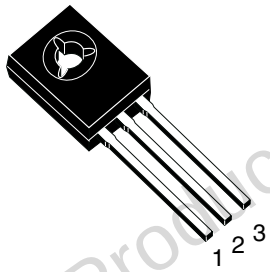

SOT-32

Figure 1. Internal schematic diagram

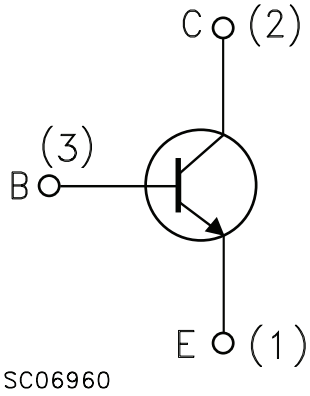

Obsolete Product(s) - Obsolete Product(s)

Table 1. Device summary

Order code	Marking	Package	Packaging
MJE182	MJE182	SOT-32	Tube

1 Electrical ratings

Table 2. Absolute maximum ratings

Symbol	Parameter	Value	Unit
V_{CEO}	Collector-emitter voltage (I_B = 0)	80	V
V_{CBO}	Collector-base voltage (I_E = 0)	100	V
V_{EBO}	Base-emitter voltage (I_C = 0)	7	V
I_C	Collector current	3	A
I_{CM}	Collector peak current (t_P < 5 ms)	6	A
I_B	Base current	1	A
I_{BM}	Base peak current (t_P < 5 ms)	2	A
P_{TOT}	Total dissipation at $T_c \leq 25$ °C	12.5	W
T_{stg}	Storage temperature	-65 to 150	°C
T_J	Total power dissipation at $T_c \leq 25$ °C	150	

Table 3. Thermal data

Symbol	Parameter	Value	Unit
R_{thJC}	Thermal resistance junction-case max	10	°C/W
$R_{th\text{-}amb}$	Thermal resistance junction-ambient max	83.3	°C/W

Obsolete Product(s) - Obsolete Product(s)

2 Electrical characteristics

T_{case} = 25 °C unless otherwise specified.

Table 4. Electrical characteristics

Symbol	Parameter	Test conditions	Min.	Typ.	Max.	Unit
I_{CBO}	Collector cut-off current (I_E = 0)	V_{CB}= 100 V V_{CB} = 100 V, T_c = 150 °C			0.1 0.1	µA mA
V_{EBO}	Emitter cut-off current (I_C = 0)	V_{EB} = 7 V			0.1	µA
$V_{CEO(sus)}$ (1)	Collector-emitter sustaining voltage (I_B = 0)	I_C = 10 mA	80			V
$V_{CE(sat)}$ (1)	Collector-emitter saturation voltage	I_C = 0.5 A I_B = 50 mA I_C = 1.5 A I_B = 0.15 A I_C = 3 A I_B = 0.6 A			0.3 0.9 1.7	V
$V_{BE(sat)}$ (1)	Base-emitter saturation voltage	I_C = 1.5 A I_B = 0.15 A I_C = 3 A I_B = 0.6 A			1.5 2	V V
$V_{BE(on)}$ (1)	Base-emitter on voltage	I_C = 0.5 A V_{CE} =1 V			1.2	V
h_{FE}	DC current gain	I_C = 0.1 A V_{CE} = 1 V I_C = 0.5 A V_{CE} = 1 V I_C = 1.5 A V_{CE} = 1 V	50 30 12		250	
f_T	Transistor frequency	I_C = 0.1 A V_{CE} = 10 V f=10 MHz	50			MHz
C_{CBO}	Collector-base capacitance (I_E=0)	V_{CB} = 10 V f= 0.1 MHz			40	pF

1. Pulse test: pulse duration ≤ 300 µs, duty cycle ≤ 1.5 %.

Obsolete Product(s) - Obsolete Product(s)

3 Package mechanical data

In order to meet environmental requirements, ST offers these devices in different grades of ECOPACK® packages, depending on their level of environmental compliance. ECOPACK® specifications, grade definitions and product status are available at: *www.st.com*. ECOPACK® is an ST trademark.

Obsolete Product(s) - Obsolete Product(s)

Table 5. SOT-32 (TO-126) mechanical data

Dim.	mm.		
	Min.	Typ.	Max.
A	2.40		2.90
B	0.64		0.88
B1	0.39		0.63
D	10.50		11.05
E	7.40		7.80
e	2.04	2.29	2.54
e1	4.07	4.58	5.08
L	15.30		16
ØP	2.90		3.20
Q		3.80	
Q1	1		1.52
H2		2.15	
I		1.27	

Figure 2. SOT-32 (TO-126) drawing

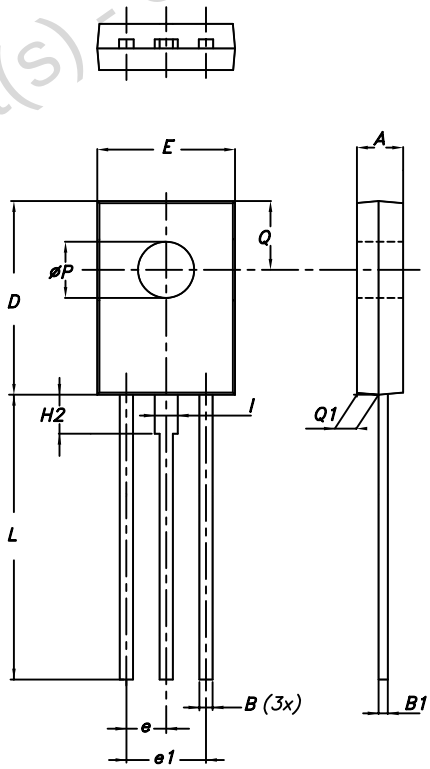

Obsolete Product(s) - Obsolete Product(s)

4 Revision history

Table 6. Document revision history

Date	Revision	Changes
08-Aug-2011	1	Initial release

Obsolete Product(s) - Obsolete Product(s)

Please Read Carefully:

Information in this document is provided solely in connection with ST products. STMicroelectronics NV and its subsidiaries (“ST”) reserve the right to make changes, corrections, modifications or improvements, to this document, and the products and services described herein at any time, without notice.

All ST products are sold pursuant to ST’s terms and conditions of sale.

Purchasers are solely responsible for the choice, selection and use of the ST products and services described herein, and ST assumes no liability whatsoever relating to the choice, selection or use of the ST products and services described herein.

No license, express or implied, by estoppel or otherwise, to any intellectual property rights is granted under this document. If any part of this document refers to any third party products or services it shall not be deemed a license grant by ST for the use of such third party products or services, or any intellectual property contained therein or considered as a warranty covering the use in any manner whatsoever of such third party products or services or any intellectual property contained therein.

UNLESS OTHERWISE SET FORTH IN ST’S TERMS AND CONDITIONS OF SALE ST DISCLAIMS ANY EXPRESS OR IMPLIED WARRANTY WITH RESPECT TO THE USE AND/OR SALE OF ST PRODUCTS INCLUDING WITHOUT LIMITATION IMPLIED WARRANTIES OF MERCHANTABILITY, FITNESS FOR A PARTICULAR PURPOSE (AND THEIR EQUIVALENTS UNDER THE LAWS OF ANY JURISDICTION), OR INFRINGEMENT OF ANY PATENT, COPYRIGHT OR OTHER INTELLECTUAL PROPERTY RIGHT.

UNLESS EXPRESSLY APPROVED IN WRITING BY TWO AUTHORIZED ST REPRESENTATIVES, ST PRODUCTS ARE NOT RECOMMENDED, AUTHORIZED OR WARRANTED FOR USE IN MILITARY, AIR CRAFT, SPACE, LIFE SAVING, OR LIFE SUSTAINING APPLICATIONS, NOR IN PRODUCTS OR SYSTEMS WHERE FAILURE OR MALFUNCTION MAY RESULT IN PERSONAL INJURY, DEATH, OR SEVERE PROPERTY OR ENVIRONMENTAL DAMAGE. ST PRODUCTS WHICH ARE NOT SPECIFIED AS "AUTOMOTIVE GRADE" MAY ONLY BE USED IN AUTOMOTIVE APPLICATIONS AT USER’S OWN RISK.

Resale of ST products with provisions different from the statements and/or technical features set forth in this document shall immediately void any warranty granted by ST for the ST product or service described herein and shall not create or extend in any manner whatsoever, any liability of ST.

ST and the ST logo are trademarks or registered trademarks of ST in various countries.

Information in this document supersedes and replaces all information previously supplied.

The ST logo is a registered trademark of STMicroelectronics. All other names are the property of their respective owners.

© 2011 STMicroelectronics - All rights reserved

STMicroelectronics group of companies

Australia - Belgium - Brazil - Canada - China - Czech Republic - Finland - France - Germany - Hong Kong - India - Israel - Italy - Japan - Malaysia - Malta - Morocco - Philippines - Singapore - Spain - Sweden - Switzerland - United Kingdom - United States of America

www.st.com

Obsolete Product(s) - Obsolete Product(s)